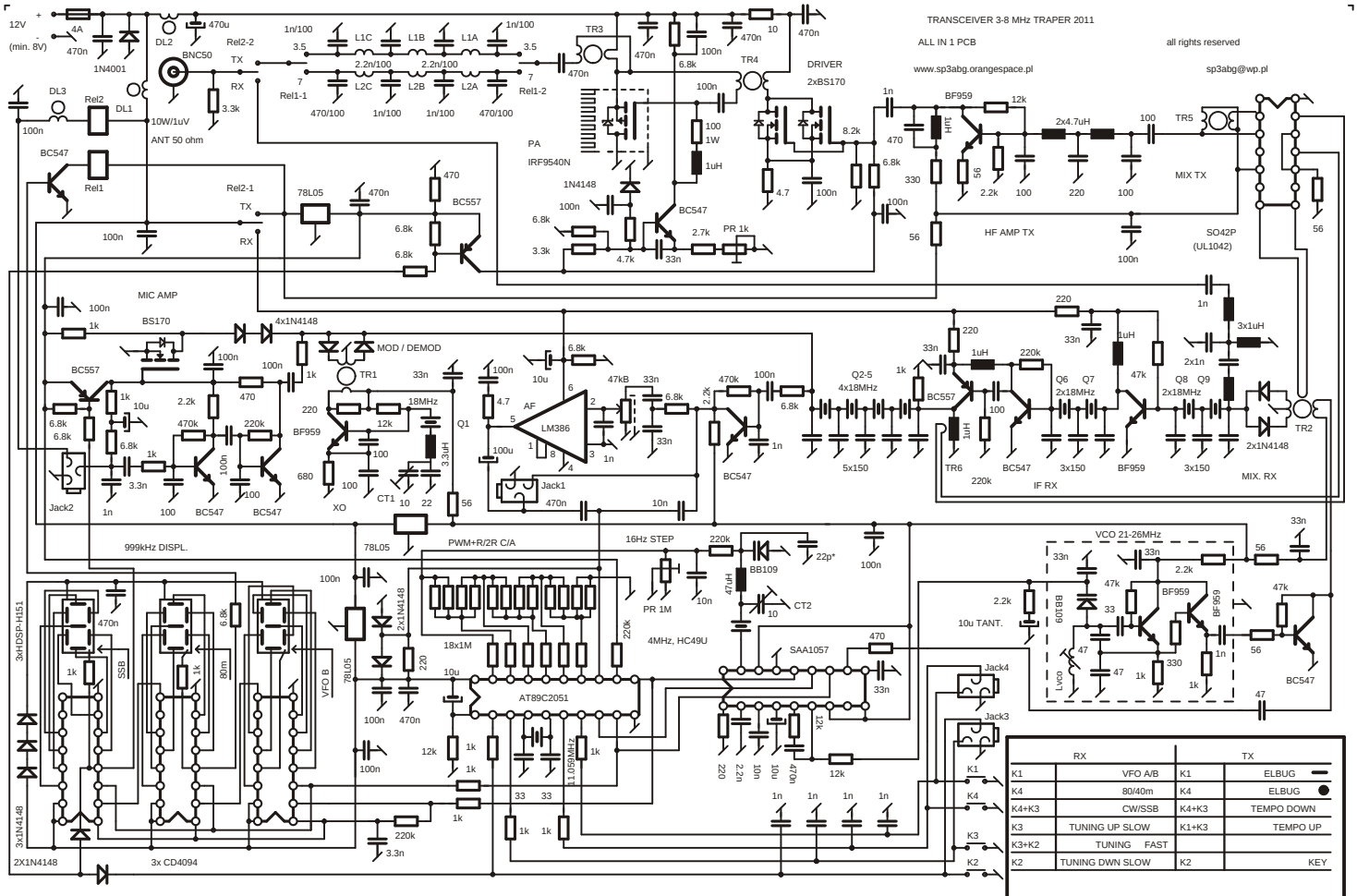

RX		TX	
K1	VFO A/B	K1	ELBUG
K4	80/40m	K4	ELBUG
K4+K3	CW/SSB	K4+K3	TEMPO DOWN
K3	TUNING UP SLOW	K1+K3	TEMPO UP
K3+K2	TUNING FAST		
K2	TUNING DWN SLOW	K2	KEY

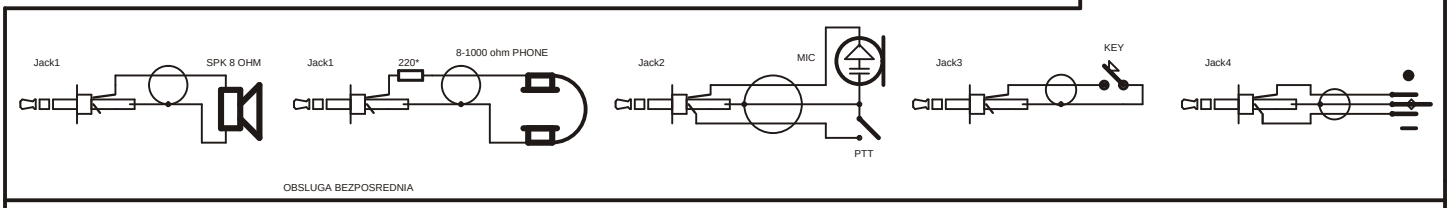

OBSLUGA BEZPOSREDNIA
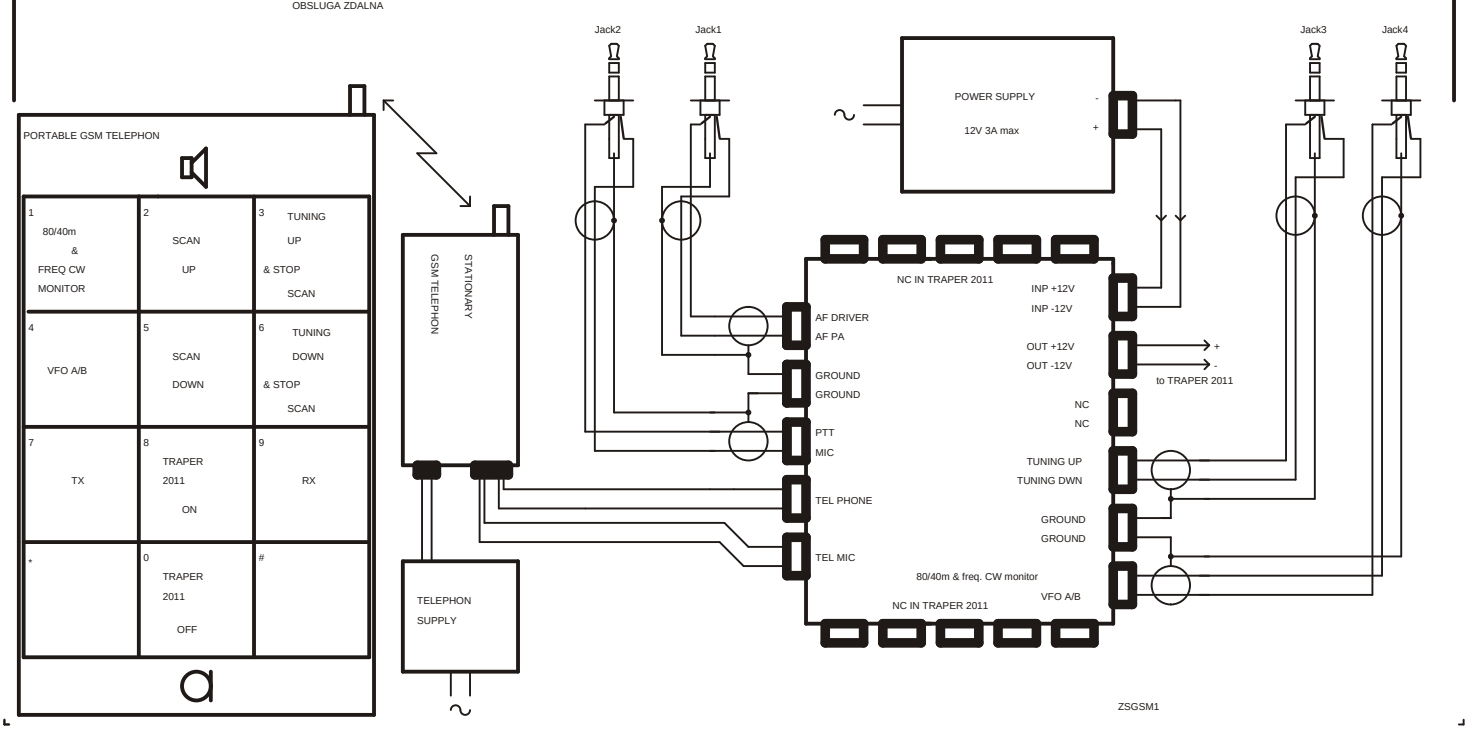
OBSLUGA ZDALNA